PB-2 AC Box

User manual

PARTIZAN™

BE DIFFERENT
LEAD WITH IT

2026

Content

1. **Product overview** 3

2. **Installation** 4

3. **Wiring** 5

Contacts: 6

1. Product overview

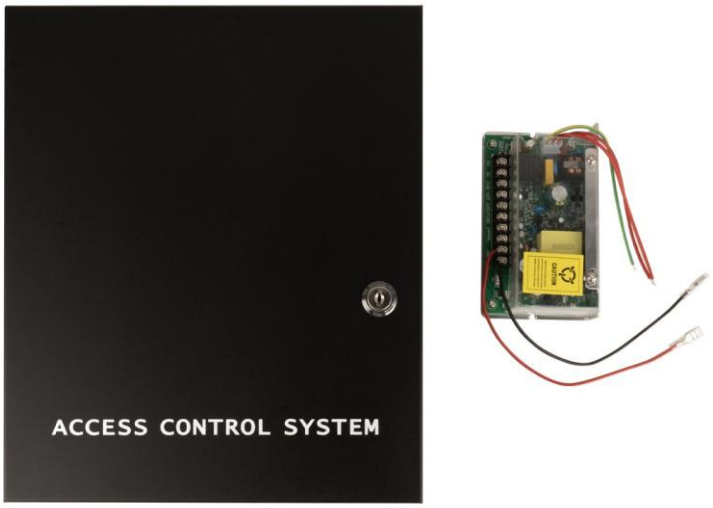

Fig.1. PB-2 AC Box

The Partizan PB-2 is a metal AC box designed to house an access controller together with its power supply. It combines a built-in 12 V / 5 A power supply and space for a 12 V / 7 Ah backup battery, so the controller and connected devices remain powered during mains outages.

The black metal casing with a lockable door protects the electronics from unauthorized access, while the IP44 rating provides protection against solid objects and splashing water. The spacious interior (370 × 255 × 70 mm) leaves room for the controller, the battery and cable routing.

The PB-2 is a ready-to-install solution for building a complete access control point, backed by a 3-year warranty.

2. Installation

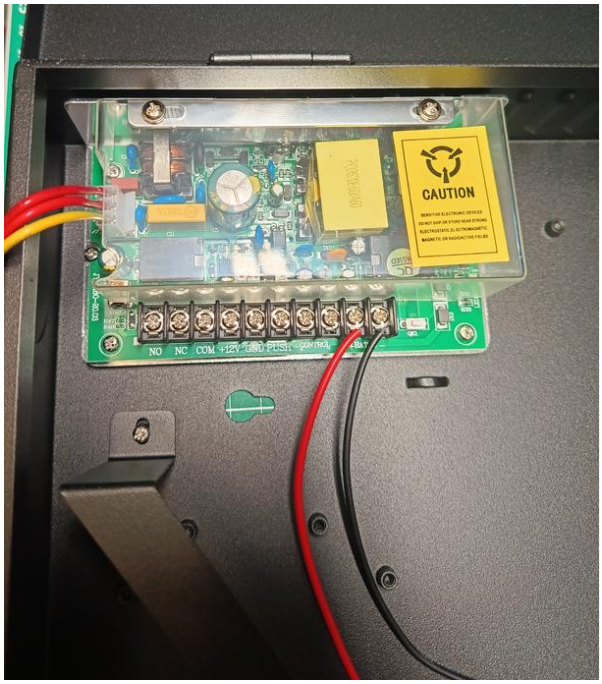

Fig.2. PB-2 AC Box interior

Warning: Installation and wiring must be performed by qualified personnel. Disconnect the mains supply before opening the box or making any connections.

Step 1 — Mount the box

Fix the box to the wall through the mounting holes in the rear panel. Leave enough space in front of the box for the door to open fully.

Step 2 — Install the access controller

Mount the access controller inside the box and route the connection cables into the box.

Step 3 — Install the battery

Place the 12 V / 7 Ah backup battery inside the box. Connect the red lead to the battery positive (+) terminal and the black lead to the negative (−) terminal.

Step 4 — Make the connections

Connect the access controller and the mains supply as shown in the wiring diagram (see Section 3). Connect the mains supply last.

Step 5 — Close the box

Check all connections, close the door and lock it with the key.

3. Wiring

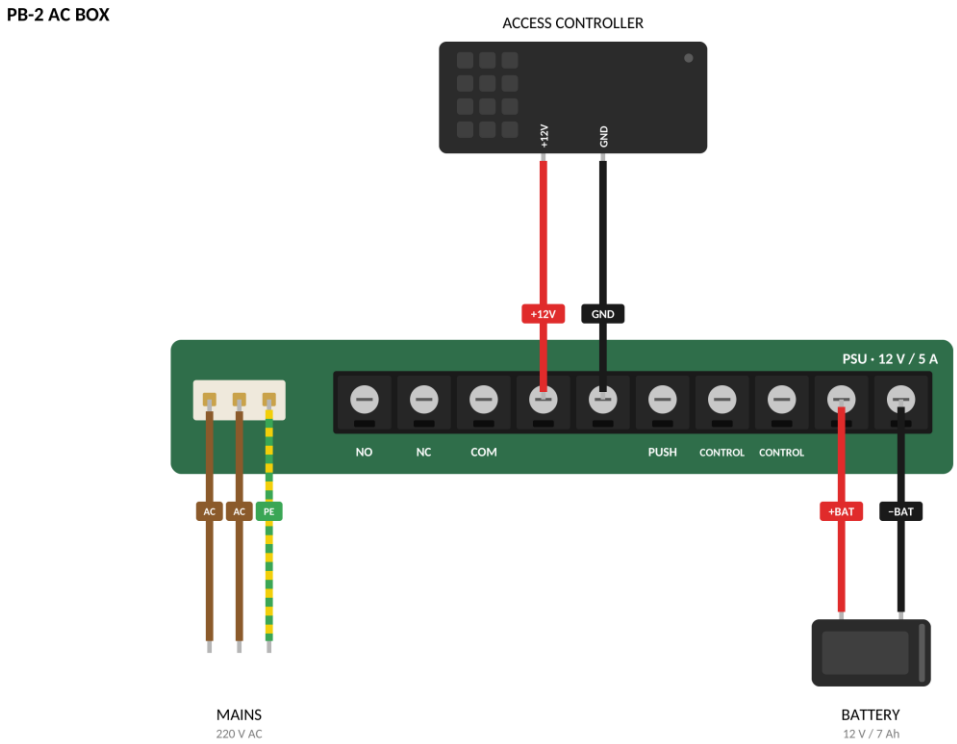

Fig.3. Wiring diagram

Terminal	Function	Notes
AC, AC	Mains input	220 V AC
PE	Protective earth	Yellow-green wire
+12V	DC output (+)	12 V DC, to the access controller
GND	DC output (−)	Ground
+BAT	Battery (+)	Red lead
−BAT	Battery (−)	Black lead
NO, NC, COM	Relay output	Not used in this wiring diagram
PUSH	Push button input	Not used in this wiring diagram
CONTROL	Control terminals	Not used in this wiring diagram

Note: The lock, exit button and other access control devices are connected according to the access controller manual.

Contacts:

WhatsApp: +420 777 054 888

Email: support@partizan.global

Telegram: https://t.me/PartizanSupport_bot